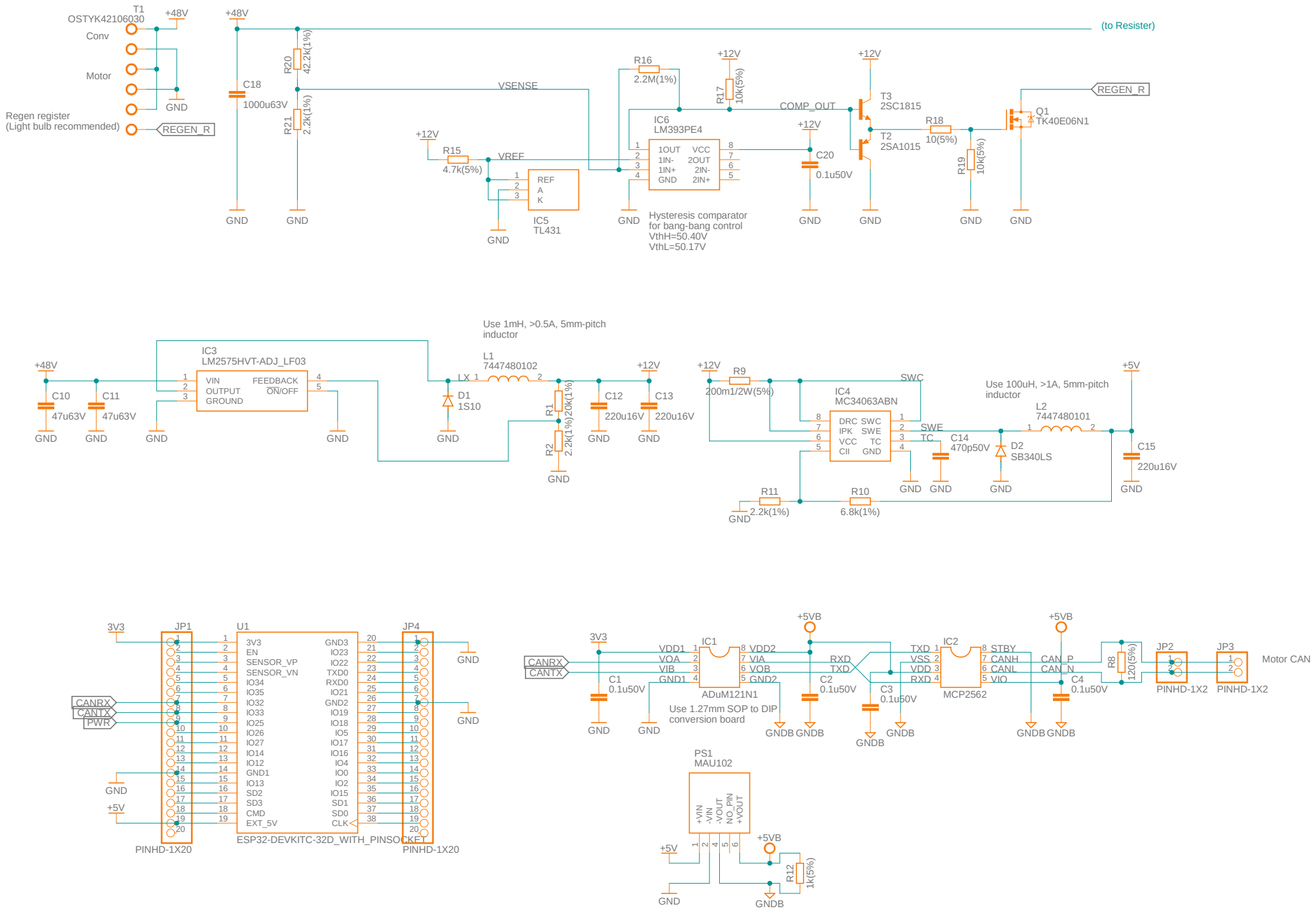
T1
OSTYK42106030
Conv
Motor
Regen register
(Light bulb recommended)
REGEN_R
+48V
GND
C18
1000u63V
R20
42.2k(1%)
R21
2.2k(1%)
VSENSE
(to Resister)
R16
2.2M(1%)
+12V
R17
10k(5%)
IC6
LM393PE4
1OUT
1IN-
1IN+
GND
VCC
2OUT
2IN-
2IN+
Hysteresis comparator
for bang-bang control
VthH=50.40V
VthL=50.17V
COMP_OUT
C20
0.1u50V
T3
2SC1815
T2
2SA1015
R18
10(5%)
R19
10k(5%)
Q1
TK40E06N1
R15
4.7k(5%)
VREF
REF
A
K
IC5
TL431
IC3
LM2575HVT-ADJ_LF03
VIN
OUTPUT
GROUND
FEEDBACK
ON/OFF
C10
47u63V
C11
47u63V
Use 1mH, >0.5A, 5mm-pitch
inductor
L1
7447480102
LX
D1
1S10
R1
20k(1%)
R2
2.2k(1%)
C12
220u16V
C13
220u16V
R9
200m1/2W(5%)
SWC
IC4
MC34063ABN
DRC
IPK
VCC
CII
SWC
SWE
TC
GND
SWE
TC
C14
470p50V
D2
SB340LS
Use 100uH, >1A, 5mm-pitch
inductor
L2
7447480101
+5V
C15
220u16V
R11
2.2k(1%)
R10
6.8k(1%)
3V3
JP1
PINHD-1X20
U1
3V3
EN
SENSOR_VP
SENSOR_VN
IO34
IO35
IO32
IO33
IO25
IO26
IO27
IO14
IO12
GND1
IO13
SD2
SD3
CMD
EXT_5V
GND3
IO23
IO22
TXD0
RXD0
IO21
GND2
IO19
IO18
IO5
IO17
IO16
IO4
IO0
IO2
IO15
SD1
SD0
CLK
ESP32-DEVKITC-32D_WITH_PINSOCKET
JP4
PINHD-1X20
CANRX
CANTX
PWR
+5V
+5VB
IC1
VDD1
VOA
VIB
GND1
VDD2
VIA
VOB
GND2
ADuM121N1
Use 1.27mm SOP to DIP
conversion board
RXD
TXD
C1
0.1u50V
C2
0.1u50V
C3
0.1u50V
GNDB
IC2
TXD
VSS
VDD
RXD
STBY
CANH
CANL
VIO
MCP2562
CAN_P
CAN_N
C4
0.1u50V
R8
120(5%)
JP2
PINHD-1X2
JP3
PINHD-1X2
Motor CAN
PS1
MAU102
+VIN
-VIN
-VOUT
NO_PIN
+VOUT
R12
1k(5%)